5/18/2009 4:48:31 PM Last Saved By dmyatesjr TimeStamp

REVISION HISTORY				
REV	ECN	DESCRIPTION	DATE	APPROVED
A	670061	XXXXXXXXXXXXXXXXXXXX	6/21987	RV
B	670081	XXXXXXXXXXXXXXXXXXXX	9/9/1987	RV
C	680201	XXXXXXXXXXXXXXXXXXXX	11/17/1988	RV
D	680201	80014002 WAS 80014007	7/20/1990	RV
E	XXXXXXX	XXXXXXXXXXXXXXXXXXXX		DJ
F	070169	REMOVED "-" OR BLANK SPACE FROM REVISIONS	1/22/2008	AG
G	090154	UPDATED	5/26/2009	PG
H	090206	UPDATED	7/20/2009	SH

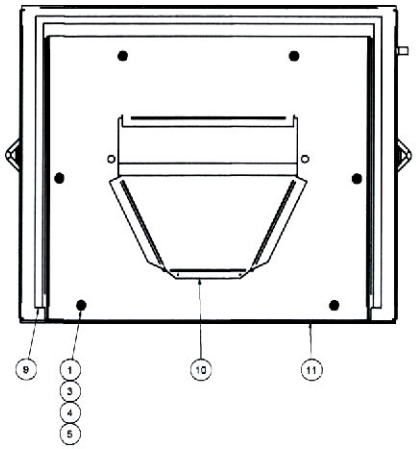

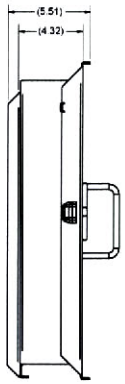

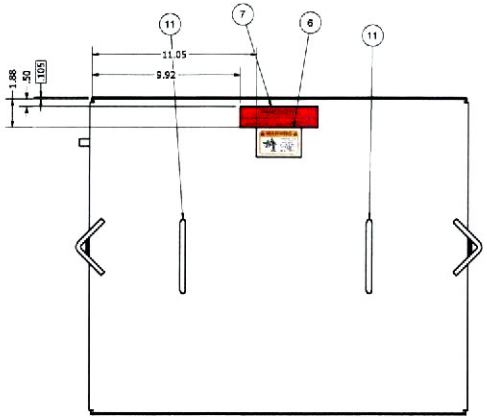

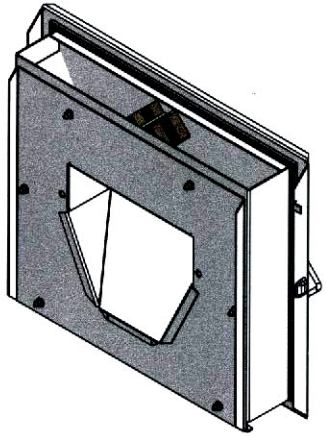

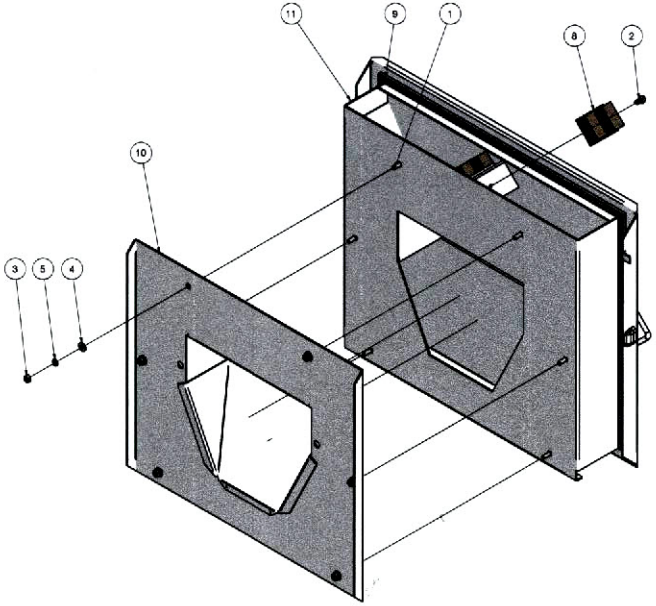

ITEM	PART NUMBER	QTY	DESCRIPTION
11	90000870	1	DOOR WLDMT, GRINDER W/LANCE, D MILL
10	90000440	1	WEAR PLATE WELDMENT, D-MILL
9	80014002	7.5	TAPE POLYURETHANE, .38X.50"
8	80008001	2	MAGNET, MILL, CERAMIC STEEL
7	80006508	1	DECAL, WARNING OPEN SWITCH
6	80003642	1	DECAL, WARNING, FAN BLADE
5	68443300	8	WASHER, LOCK HELICAL 1/4"
4	68403300	8	WASHER, FLAT 1/4"
3	68083300	8	NUT, HEX 1/4-20
2	65483317	2	HEX SLT HD T/C 1/4-20 X 3/4"
1	60283317	8	BOLT, CARR 1/4-20 X 3/4"

NOTES:
1. DO NOT SCALE FROM DRAWING.
2. ONE PIECE REQUIRED PER 92001495: COMMON SENTRY, 2000 COMP PARTS.
3. ONE PIECE REQUIRED PER 92001501: SENTRY 2000 1HP ASSY.
4. ONE PIECE REQUIRED PER 92001512: SENTRY 1000 1HP ASSY.
5. ONE PIECE REQUIRED PER 92001515: SENTRY 1000 3HP ASSY.
6. ONE PIECE REQUIRED PER 92001552: SENTRY 1000 1HP ASSY.
7. ONE PIECE REQUIRED PER 92001555: SENTRY 1000 3HP ASSY.
8. ONE PIECE REQUIRED PER 92002900: GRINDER CHAMBER ASSY.
9. ONE PIECE REQUIRED PER 92002910: HAMMER MILL, SENTRY 145.

This information is the property of the A.T. Ferrell Company, Inc and must be returned immediately upon request. No part of this drawing may be reproduced, stored in a retrieval system or transmitted in any form or by any means, without prior written consent of the A.T. Ferrell Company, Inc

CAD

NO MANUAL CHANGES

TOLERANCES EXCEPT AS NOTED

MIX-MILL FARMATIC FEED PROCESSING SYSTEMS

DIVISION OF A. T. FERRELL COMPANY — BLUFFTON, INDIANA - USA

DECIMAL: .XX = ±.005 .XXX = ±.030	FINISH: NONE	SCALE: 1:4	DRAWN BY: pggalea	APPROVED BY: DMJ
FRACTIONAL: ±1/32	TITLE: DOOR ASSY, GRINDER W/LANCE, SENTRY/D MILL			
ANGULAR: ±1/2°	DATE: 3/27/2007	SIZE: D	PART NUMBER: 92000799	SHEET: 1 of 1